AVX AIRCRAFT COMPANY

LIGHTWEIGHT GEARBOX FOR AIR CUSHION VEHICLES

TOPIC N181-072

CONTRACT N68335-19-C-0842

P.I. IAN W. BROWN

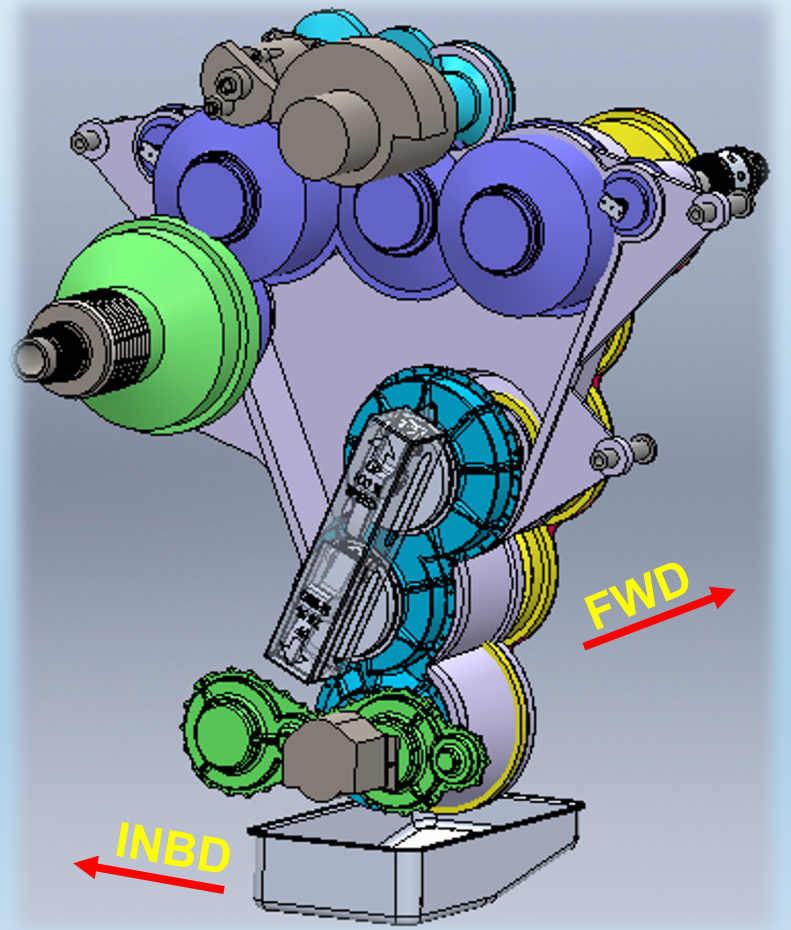

EXPERIENCED-INNOVATIVE-VISIONARY

About AVX Aircraft Company

AVX About & Contracts Awarded

- AVX Aircraft Company was founded in 2005 with a vision of bringing advanced vertical takeoff and landing aircraft to civil and military markets
- Contracts awarded by U.S. Army Technology Development Directorate-Aviation Technology/System Integration and Demonstration (TDD-A/SID)
  - Joint Multi Role Technology Demonstrator (JMR-TD)
  - Future Attack Reconnaissance Aircraft (FARA)
  - Future Long-Range Assault Aircraft (FLRAA)
  - Ultra-Reliable Design (URD)
- Contracted by Northrup Grumman to design, build and test 2000 HP Transmission and Rotor System for Tactically Exploited Reconnaissance Node (TERN)

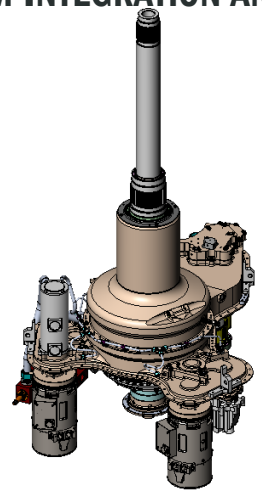

AVX Patents & Resources

- Patents – AVX Aircraft has received and applied for patents for:
  - Coaxial-Compound Helicopters (including drive system)
  - Unique helicopter rotor control system
  - Lightweight Gearbox for Air Cushion Vehicles
  - Locking Assembly for Lightweight Gearbox
  - Environmental Seal for Lightweight Gearbox

- Key Resources:
  - AVX Aircraft Engineering Team comprises experienced, innovative, and visionary engineering with decades designing, developing and sustaining multiple rotorcraft including V-22, AH-1Z, UH-1Y, CH-53, AH-64

The Navy Challenge

Design and build a prototype lightweight gearbox for Ship-To-Shore Landing Craft Air Cushion Vehicle

Mandatory Requirements		
Requirement	Goal	AVX Design
Weight	Under 4,730 lbs.	3409 lbs (With 5% contingency)
Lift Fan Speed	Multispeed	Meets Requirement
Lift Fan Direction of Rotation	Manual Mechanism to Select Direction	Meets Requirement
Life	4,500 Operating Hours	Exceeds Requirement
Maintainability Reliability	Increase Efficiency Decrease Maintenance	Meets 30-year design requirement

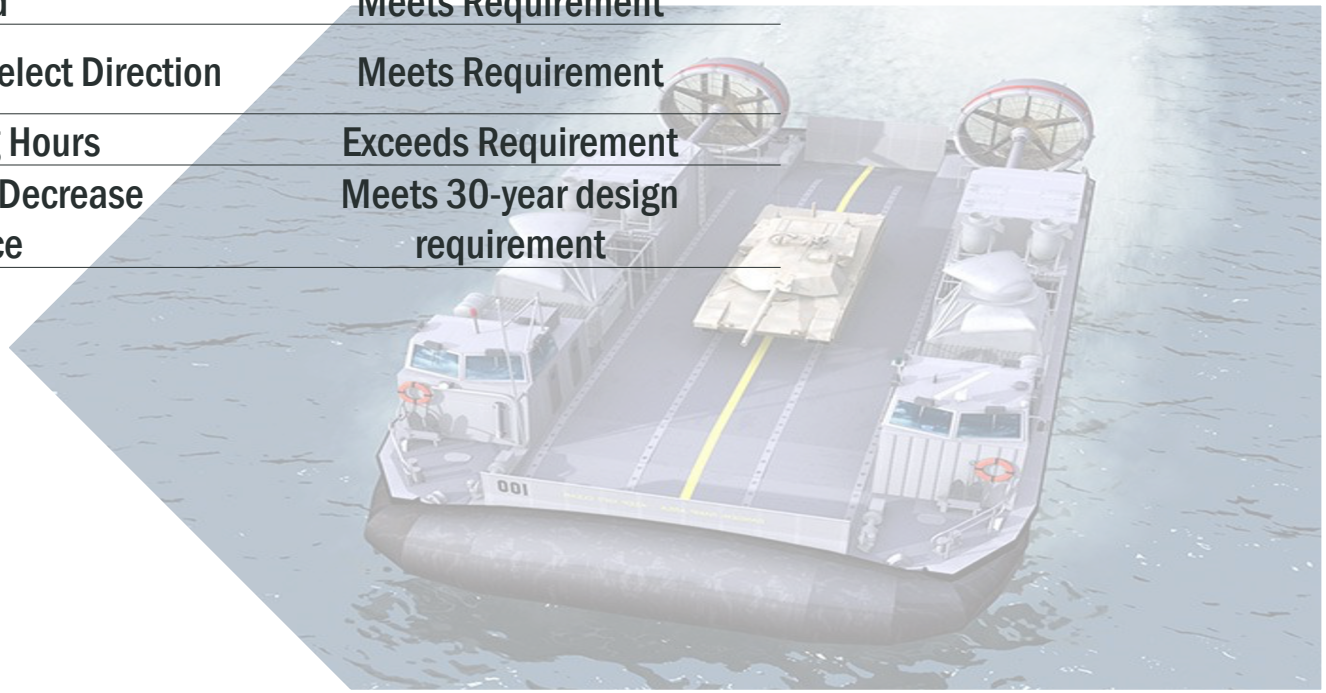

Design Constraints:

- Using the existing craft's propulsor shaft
- Using the existing craft's mounting locations
- Using the existing craft's engines' input locations
- Maintaining the output shaft RPM
- Maintaining the craft's engines' rotation direction
- Comply with Craft Specification

Operational Need and Improvement

The Ship-to-Shore Connector (SSC) is an Air Cushion Vehicle (ACV) providing amphibious transportation of equipment and personnel from ship to shore and shore to shore. Development of a performance improving, robust, maintainable, lightweight (max 4,730 lbs) and variable speed gearbox is paramount to SSC operation. Along with decreasing weight, making a more serviceable gearbox would lead to reduced repair costs. Typically, each major repair requiring gearbox removal requires 200 labor hours and Depot Level repairs cost $100,000. Additionally, an innovative multi-speed functionality would allow for increased efficiency and enable a reduction in fuel consumption. The new gearbox design must be compatible with the current craft regarding form, fit and function.

THE SOLUTION - AVX LIGHTWEIGHT GEARBOX

- **Drop-in Ready:**
  - Fits within existing space
  - Utilizes current attachment locations and features
  - Utilizes existing propulsor and lift fan shaft
  - Utilizes existing engine input locations
  - Maintains engine rotation direction and RPM
- **Lightweight:**
  - Planetary reduction and double helical gear design resulting in a weight of 1321 lbs less than target
- **Two-speed Lift Fan:**
  - Shifting concept allows for 100% or 85% Lift Fan Section Power Flow

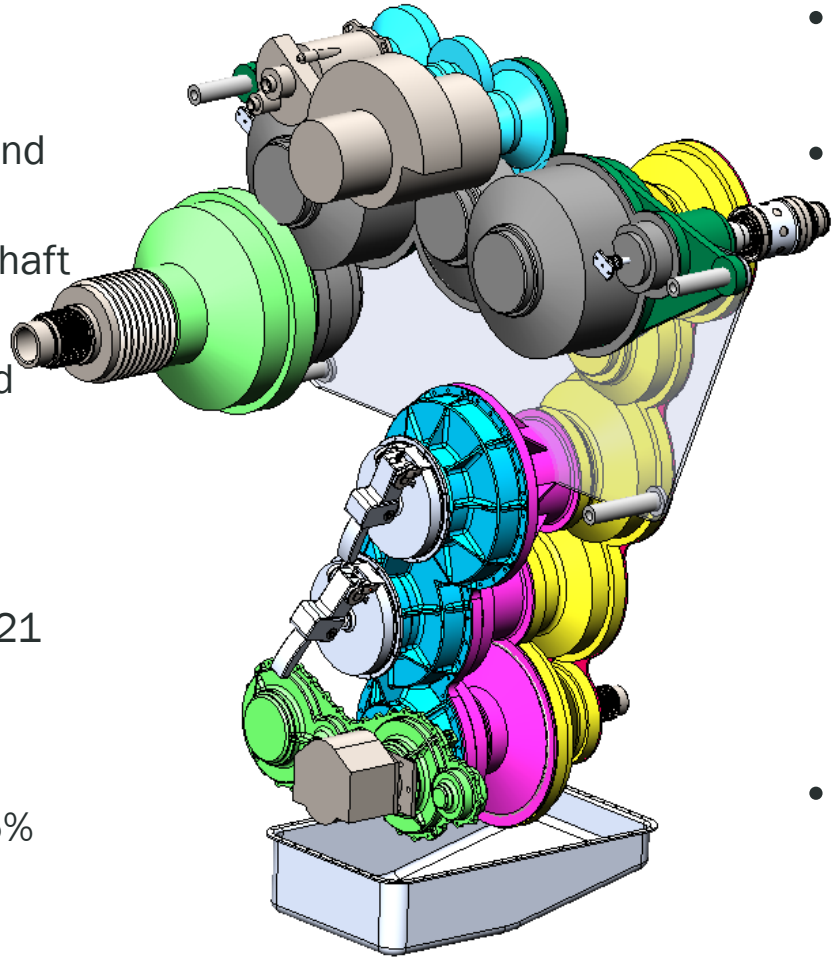

- **Overrunning Clutch:**
  - Eliminates need for brake
- **Improved reliability and decreased Maintenance:**
  - Self contained reservoir & dedicated lubrication system eliminating pre-oiler
    - Operating at greater efficient temperatures
  - Reduced gear tooth misalignment and probability of scuffing
  - Includes inspection ports for every gear mesh
  - Recommends engine shear section outside the gearbox
- **Strong Supply Base:**
  - Proven Manufacturers
  - Central location for gearbox assembly

Key Features – Advantages - Benefits

AVX Aircraft Lightweight Gearbox is designed with advanced aerospace engineering criteria

Key Attributes:

- Lighter weight – 30% weight reduction
- Self contained lubrication system – oil change 5 years
- 2 Speed manual selected lift fan static shift
- Double locking design lock nuts eliminate lock wire, retaining rings, locking screws
- Innovative environmental barrier protects carbon face seals
- No scheduled time between overhaul (TBO)

Results

- 30-year, 4,500 operating hour
- fuel efficient
- low maintenance
- reliable gearbox avoids costly ($100,000 and 200 man hour) repairs.

Transition to Fleet

- AVX Aircraft has completed the preliminary design of the lightweight gearbox for Air Cushion Vehicles.
- Funding is now required to advance to a critical design review and contract with suppliers to procure long lead material and fabricate a prototype gearbox.
- The SBIR identified the acquisition program as PMS-377-6 division, landing craft technical.
- Application to NAVSEA for accelerated SBIR/STTR Acquisition Program (ASAP) has been submitted that could provide necessary program office funding to ensure the gearbox can be available to demonstrate, integrate and test on the prototype SSC Craft at Panama City, Florida.
- Following successful test performance, AVX will refine the prototype into a design that meets full SSC craft specifications and work with PMS-377 to initiate a full production contract to manufacture units for the complete program of record.

Transition / Partnership Pitch

- AVX Aircraft is developing the Lightweight Gearbox with NAVY SBIR funding. To achieve a qualified, production worthy product will require PMS-377 Program Office Funding.
- To integrate the gearbox into the SSC will require close coordinating with Textron Marine and Land Systems, the craft prime contractor.
- The AVX production gearbox could be contracted with NAVSEA and furnished to Textron as Government Furnished Equipment (GFE) or directly contracted from AVX to Textron

Way Forward

AVX AIRCRAFT COMPANY

AVX Aircraft Advanced Aerospace Engineering Gearbox provides an increase in payload, reduction in fuel costs, reduction in operational an sustainment costs over its 30 year life

- Points-of-Contact
  - Business Development – Frank King
    frank@avxaircraft.com
    682-551-2204
  - TPOC – Ian Brown
    ian@avxaircraft.com
    817-235-0623
- Address –
  - 6310 Southwest Blvd. Suite 106
    Benbrook, Texas 76109